META META SLIM Single-lever basin mixer with pop-up waste - Light Grey

33 501 662 Product version from 10/1/2021

- 125mm projection
- fixed spout
- circular, air-enriched flow
- height of mixer 134 mm
- height up to aerator 52 mm
- hole diameter 35 mm
- 2x screw-in M 8 x 1 pressure hose, leak-tested
- max. flow 5.7 l/min
- lead-free
- This product can help a building meet the requirements of Green Building Rating Systems, e.g. LEED®, BREEAM®, DGNB
- WRAS

Only suitable for basins with an overflow.

Light Grey	33 501 662-63
Chrome	33 501 662-00
Brushed Platinum	33 501 662-06
Platinum	33 501 662-08
Dark Chrome	33 501 662-19
Light Gold	33 501 662-26
Brushed Light Gold	33 501 662-27
Red	33 501 662-29
Orange	33 501 662-30
Dark Green	33 501 662-31
Matte Black	33 501 662-33
Brushed Bronze	33 501 662-42
Brushed Champagne (22kt Gold)	33 501 662-46
Champagne (22kt Gold)	33 501 662-47
Brushed Chrome	33 501 662-93
Brushed Dark Platinum	33 501 662-99

We reserve the right to change designs, product range and technical specifications without prior notice.
More information can be found at: www.dornbracht.com +49 (0) 2371 8899 900 mail@dornbracht.com

META META SLIM Single-lever basin mixer with pop-up waste - Light Grey

33 501 662 Product version from 10/1/2021

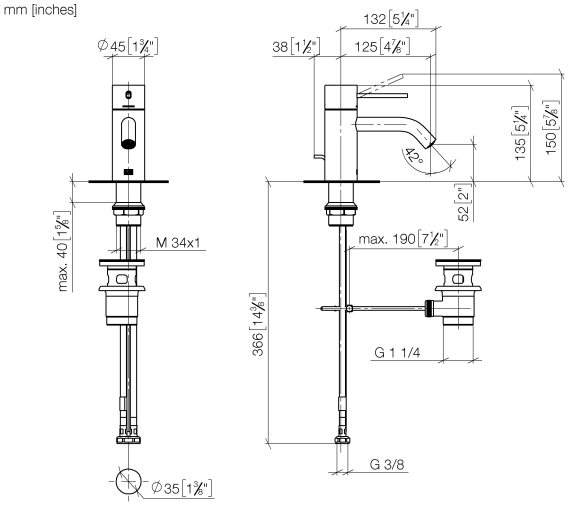

Flow rate chart

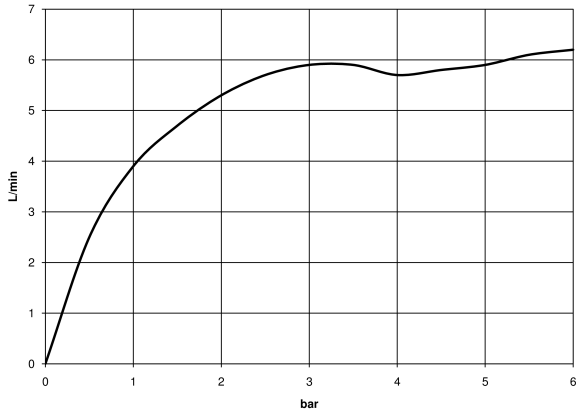

Codes & Standards

DIN 4109	ISO 3822	Scottish Water Byelaws	UK Water Supply Regulations

Ü-Zeichen

META META SLIM Single-lever basin mixer with pop-up waste - Light Grey

33 501 662 Product version from 10/1/2021

Certificates

LGA_29	WRAS_2003

META META SLIM Single-lever basin mixer with pop-up waste - Light Grey

33 501 662 Product version from 10/1/2021

Parts for other
finishes can be found
here: Chrome

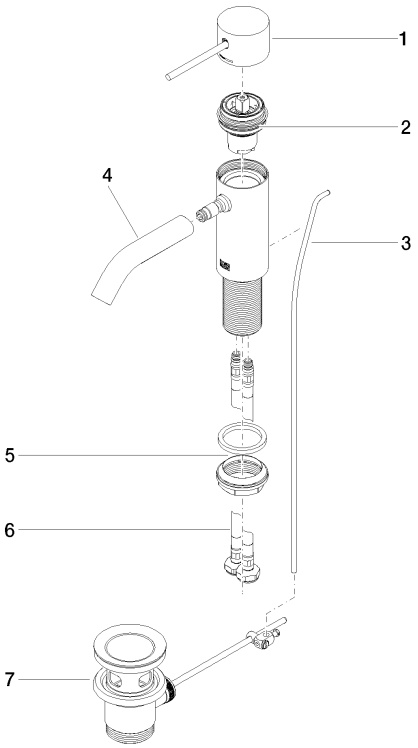

Spare parts list

No.	Item Number	Name	Quantity used	Delivery time
1	90 20 66 020 00-63	handle	1	80
2	90 15 05 044 01 90	cartridge	1	2
3	09 31 09 110-63	pull-rod	1	80
4	90 11 06 206 00-63	spout	1	80
5	04 23 10 044 07 90	fixing set	1	2
6	04 30 04 100 00 90	hose	2	2
7	90 11 01 001 00-63	pop-up waste	1	80

We reserve the right to change designs, product range and technical specifications without prior notice.
More information can be found at: www.dornbracht.com +49 (0) 2371 8899 900 mail@dornbracht.com